Copyright: This drawing is our property and patented for us according to the law of copyright and associated rights !

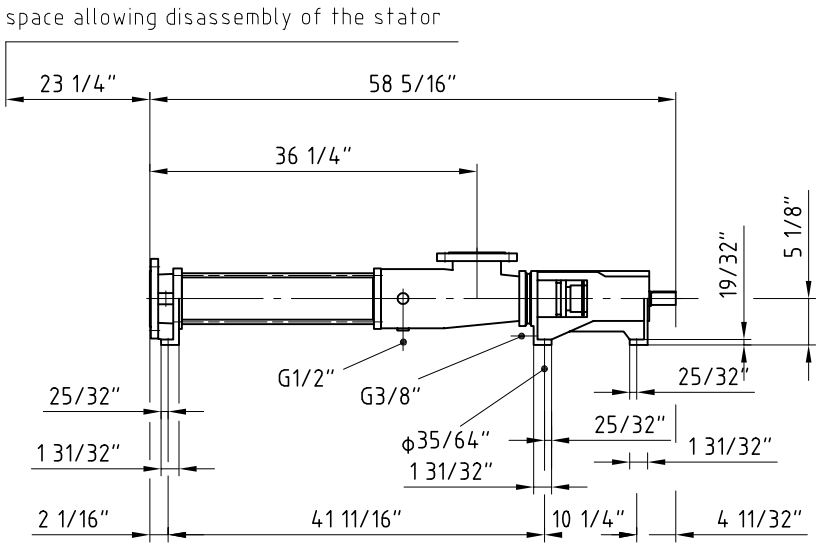

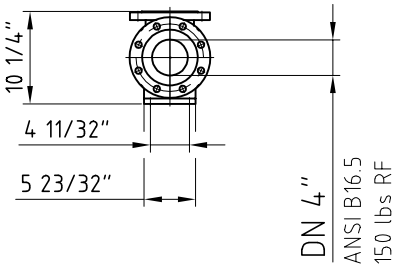

fitting key DIN 6885

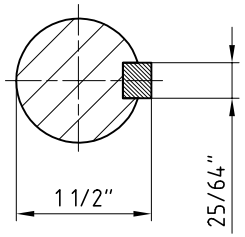

✳ design see pump data sheet

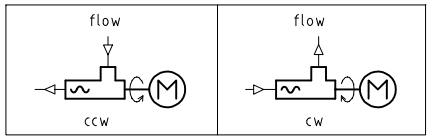

Quant.	Denomination	Item	Material	Note	Weight / kg
1	pump: NS 26-6L / 40-6LT	1			

1994	Name	Day	Scale	Weight	Denomination
Drawn	goe	01.12.	◎▷ 1:20	90 kg	dimensional drawing
Checked			EDP–No. L:\LFDZCHNG.120\12108.dwg		Drawing–no. 260-C01/0260-A-002B4

seepex.com

seepex, Inc.
511 Speedway Drive
Enon, OH 45323
www.seepex.com

changes of dimensions reserved